INNALABS INL-CVG-G100
Digital gyroscope
Preliminary Datasheet

General Description

INNALABS **INL-CVG-G100** is a single-axis Coriolis Vibratory Gyroscope designed and manufactured to meet the most challenging inertial systems requirements:

- In run Bias stability (room temperature, 1σ) < 0.1 °/hr
- Low output noise (< 0.01 °/s RMS @ 100 Hz)
- Large bandwidth (150 Hz)
- High MTBF (500,000 hr)
- Robustness (300 high- g shock)

Applications

Suitable applications are various, from inertial systems which require tactical performance and small size to antenna and platform stabilization. Here under a non-exhaustive list:

- Stabilization systems for:
  - platforms,
  - antennas,
  - optics,
  - vehicles…
- Remote systems and autonomous vehicles:
  - AGV (Automated Guided Vehicles),
  - UUV (Unmanned Underwater Vehicles),
  - UAV (Unmanned Aerial Vehicles),
  - ROV (Remotely Operated underwater Vehicles)...
- Airborne navigation, guidance and control systems:
  - IMU (Inertial Measurement Units),
  - INS & INS/GPS (Inertial Navigation Systems),
  - AHRS (Attitude Heading Reference Systems)…

Technology Description

Solid-state Coriolis Vibrating Gyros are based on the control of two standing waves in a physical body. This body is a resonator which can be designed as an axisymmetrical shape or not, but only axisymmetrical shapes lead to top of the range performances.

Following pictures show INNALABS' CVG sensitive element (SE) (on the left) and its axisymmetrical resonator (on the right). This sensitive element is used whatever INNALABS' CVG products.

The resonator is operated on its second order resonant modes. Standing waves are therefore elliptical shape oscillations with four antinodes and four nodes located circumferentially along the rim, angle between two adjacent antinode – node being 45 deg.

One of the elliptical resonant modes is excited to a prescribed amplitude. When the device rotates about its sensitive axis (along its inner stem), the resulting Coriolis forces acting on the resonator's vibrating mass elements excite the second resonant mode. Angle between major axis of the two modes is 45 deg:

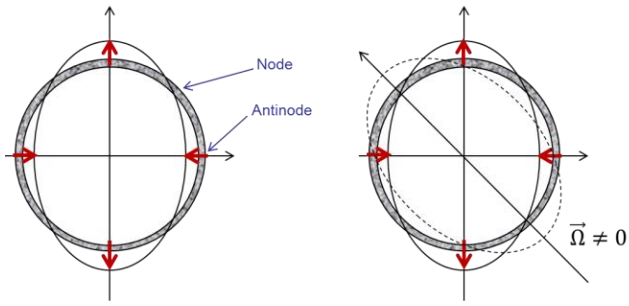

A closed-loop drives the second resonant mode to zero and the force required to null this mode is proportional to the input rotation rate. Corresponding control loop system is called force-rebalanced mode.

In order to provide forces and to sense induced motions, piezo-electric elements placed on the resonator are used. This electromechanical system is particularly effective and leads to low output noise and large dynamic range as required in case of demanding applications.

INNALABS, 5th Floor, Beaux Lane House, Mercer Street Lower, Dublin 2, Ireland, Tel/Fax: +353 1 888 1008
E-mail: contact.sales@innalabs.com, Website: www.innalabs.com

INNALABS INL-CVG-G100
Digital gyroscope
Preliminary Datasheet

Performance

Parameter	Unit	Value
Number of axis		1
Output format		Digital
Output Interface		RS-232/422/485
Output Signal Rate	Hz	2000-9000
Temperature compensation (Bias, SF)		Yes
Measurement range	deg/sec	Up to ±250*
Bandwidth	Hz	Up to 150*
Bias setting (at room temperature)	deg/hr	< 1
In run Bias stability (room temperature, 1 σ)	deg/hr	< 0.1
Bias stability, full temperature range, 1σ	deg/hr	< 15
Bias repeatability, turn-on turn-on, 1σ	deg/hr	< 10
Angular Random Walk (steady conditions)	deg/√hr	0.01
Quiescent noise (0.1 – 100 Hz), RMS	deg/sec	< 0.01
Noise under vibration (0.1 - 100 Hz), (12g rms - 0 to 2000 Hz)	deg/hr/ grms	< 30
Scale factor error, full temperature range	%	< 0.35
Scale factor linearity	ppm	< 1,000
Start-up time	sec	< 1
Warm up time	sec	< 50
Misalignment	mrad	< 10
Input signal (MIL STD 461 and 1275)	VDC	0 /+18 VDC to +36 VDC
Power consumption	Watt	< 2.3
Operational temperature	degC	-40 to +85
Storage temperature	degC	-55 to +90
Vibrations, operational	g RMS,Hz	12g, 1 – 2000 Hz, 10 min/axis
Vibrations, transport	g RMS,Hz	3g, 1 – 2000 Hz, 1 h/axis
Shock	g, ms	300g, 2 to 5ms
MTBF, (MIL-HDBK 217F)	hours	500,000
Electromagnetic Environmental Effects		Not shielded
Lifetime	years	17
Weight (Sensitive Element)	grams	71
Weight (Damper)	grams	26
Weight (Electronics and Connector)	grams	73
Dimensions	mm	H25 x D29.4 (Sensitive Element)
Built-in-self-test		Yes
In-Line-Test		Yes

* *Contact us for customized parameters*

INNALABS, 5th Floor, Beaux Lane House, Mercer Street Lower, Dublin 2, Ireland, Tel/Fax: +353 1 888 1008
E-mail: contact.sales@innalabs.com, Website: www.innalabs.com

INL-CVG-G100 dimensions drawing (mm):

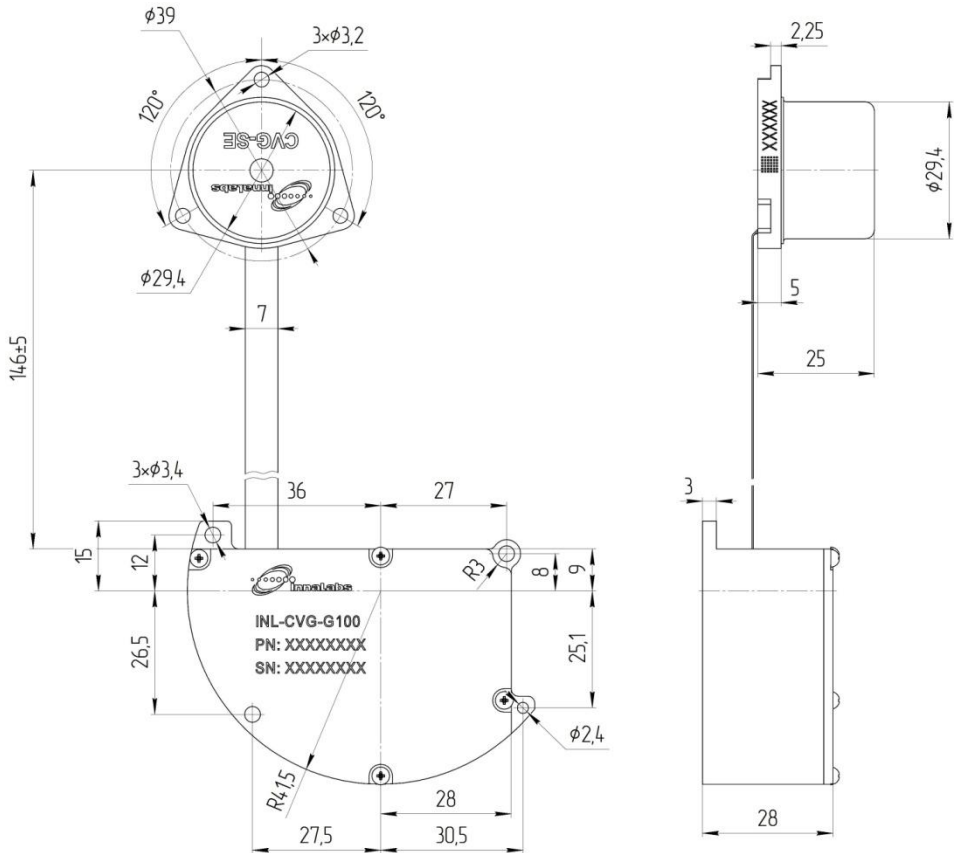

Damper dimensions drawing (mm):

> ! To ensure the **INL-CVG-G100** performance according to its specifications, INNALABS recommends using the damper together with each gyroscope (SE).

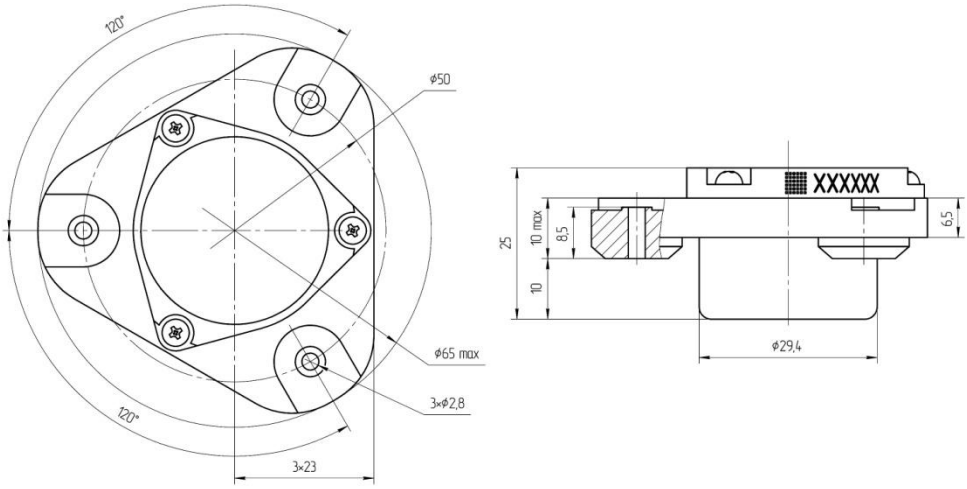

Disclaimer: *the document is subject to change without notice. INNALABS reserves the right to make changes to any product or technology herein. INNALABS does not assume any liability arising out of the application or use of the product.*